DRIVE WAY ENTRANCE ON CURB RETURNS

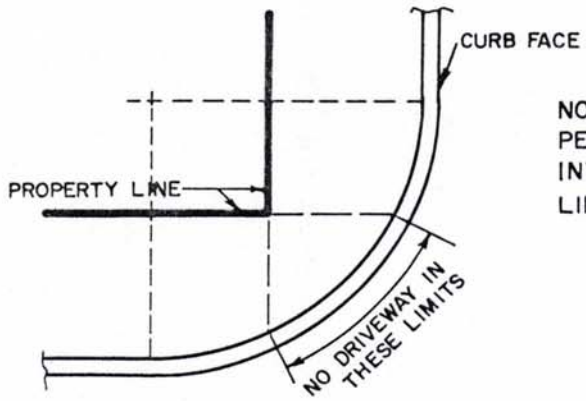

CASE I

NO PORTION OF ANY DRIVEWAY SHALL BE PERMITTED BETWEEN THE LIMITS OF THE INTERSECTION OF THE PROLONGED PROPERTY LINES AND THE CURB.

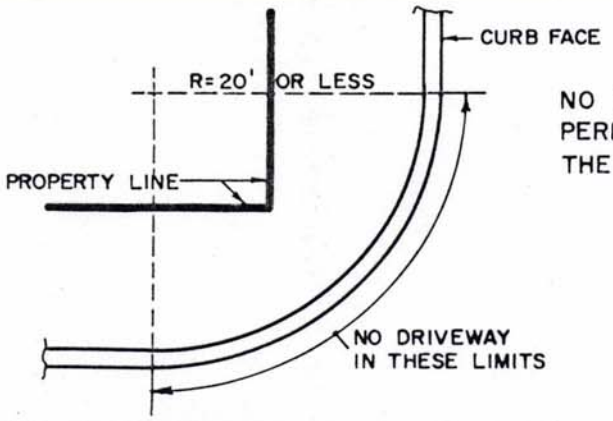

CASE II

NO PORTION OF ANY DRIVEWAY SHALL BE PERMITTED IN THE CURB RETURN WHERE THE RADIUS OF THE RETURN IS 20' OR LESS.

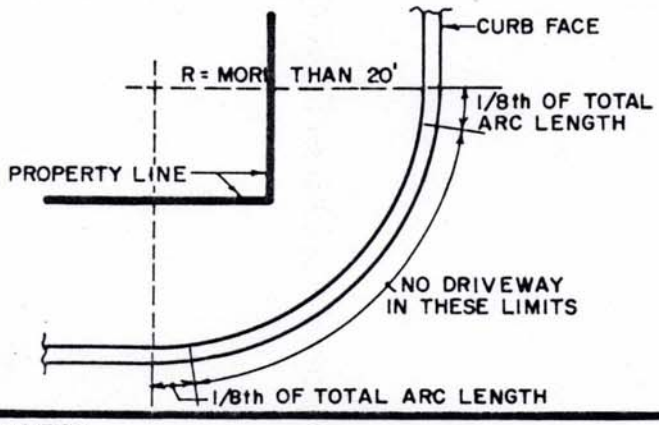

CASE III

ON ALL CURB RETURNS WHERE THE RADIUS IS MORE THAN 20', DRIVEWAYS MAY ENCROACH UPON EACH END OF THE RETURN A DISTANCE EQUAL TO 12 1/2% OR 1/8TH OF THE TOTAL ARC LENGTH ON THE CURB RETURN, THUS LEAVING 75% OF THE CURB RETURN FREE FROM DRIVEWAY ENCROACHMENT.

Revised	By	Approved

NOTES:

THE CONDITION PRODUCING THE GREATEST LENGTH OF CURB RETURN AT THE STREET CORNER, AS IN CASE I OR II, WILL BE THE RULE WHICH SHALL APPLY TO THE CONDITION INVOLVED.

NO DRIVEWAY MAY BE CONSTRUCTED WITHIN 5 FEET OF ANY EXISTING STREET LIGHT, TRAFFIC CONTROL DEVICE, OR FIRE HYDRANT.

CITY OF DOWNEY – DEPT. OF PUBLIC WORKS – ENGINEERING DIVISION

PROJECT: DRIVEWAY ENTRANCES ON CURB RETURNS	DES. BY: —		VERT. SCALE —
	DWG. BY: A. DAVIS	2-60	HORZ. SCALE —
	CK. BY W. H[illegible]	2-60	SHEET ___ OF ___ SHEETS
	APP. BY: [illegible] CITY ENGINEER	12-68 DATE	DWG. No. 9